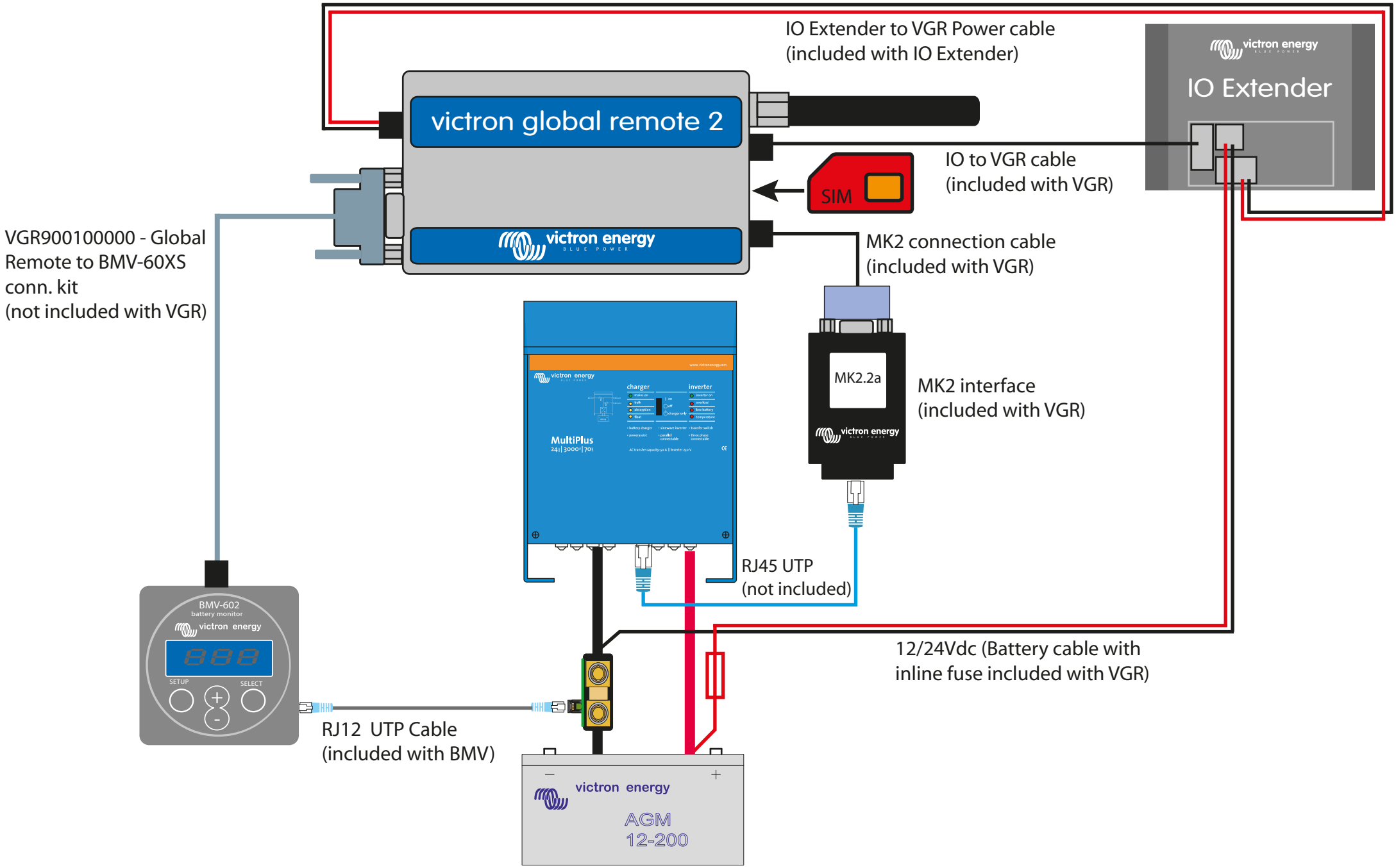Victron Global Remote 2 with BMV, VE.Bus connection and IO Extender